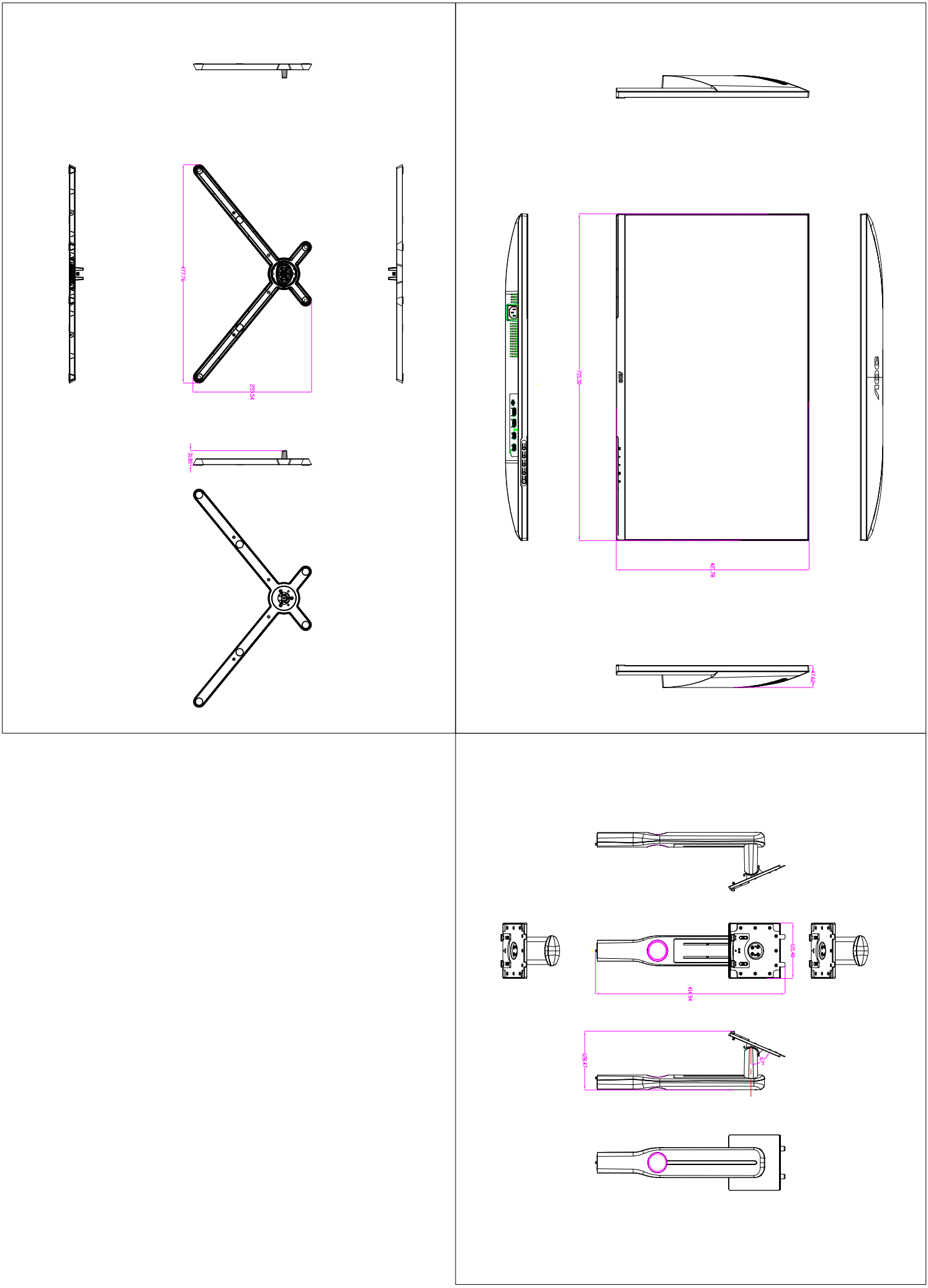
477.76
259.54
31.80
715.30
42.78
47.62
121.40
414.94
128.47
67°